Halton UTT – Multi-blade airflow management damper

Overview

- Shut-off and balancing damper for outdoor air intake and exhaust air with opposed blade design
- Damper blades comprise thermal insulation
- Tightness in closed position fulfills EN 1751 class 3 requirements
- Temperature operation range up to +100°C, optionally up to +200°C
- Galvanised steel design
- Classification of casing leakage EN 1751 class B

Product models and accessories

- Model with stainless steel /acid-proof steel (AISI 316L) design.
- Model with insulated casing
- Model with heat-proof design
- Circular duct connections
- Several actuator options

Halton reserves the right to alter products without notice.

Dimensions and weight

Models with rectangular connections

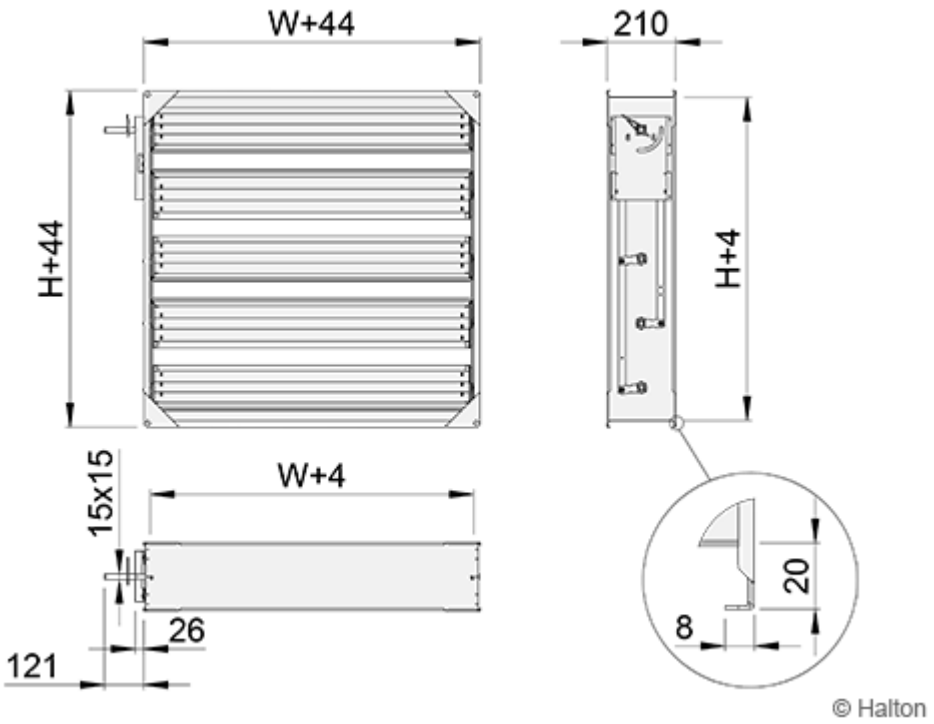

W	H
100, 200, ..., 2400	100, 200, ..., 2400

Models with circular connections (D1 or D2)

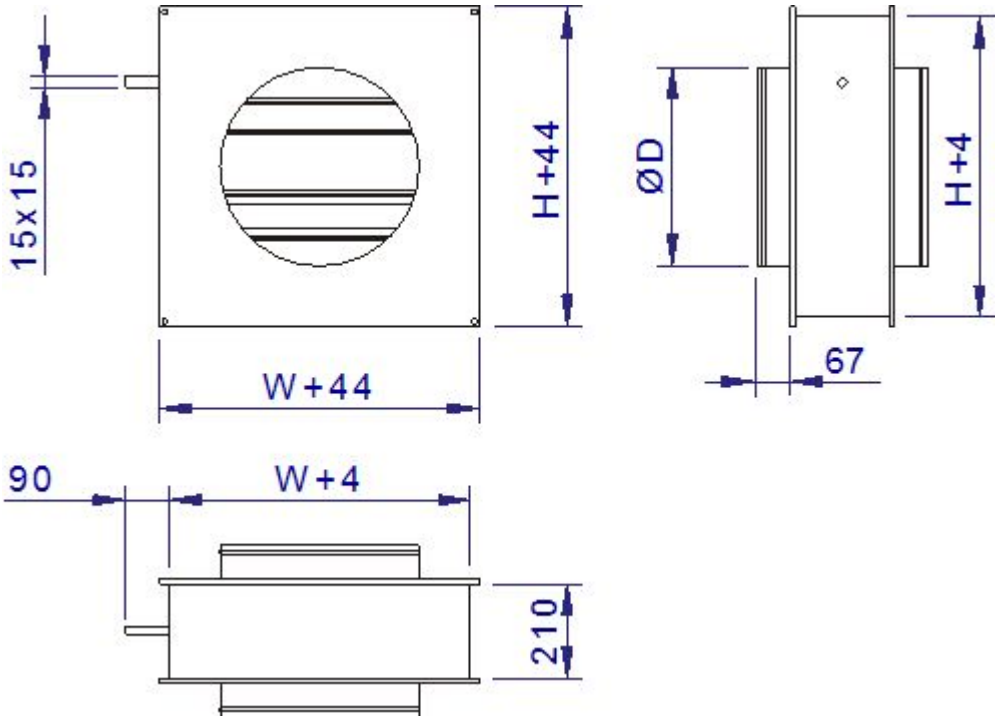

ØD	WxH
100	150×150
125	150×150
160	200×200
200	200×200
250	250×250
315	300×300
400	400×400
500	500×500
630	600×600
710	800×800
800	800×800
1000	1000×1000
1250	1300×1300

Weight [kg]

Weight presented without actuator. Basic actuator weight about 1 kg.

H	W											
	100	200	300	400	500	600	700	800	900	1000	1100	1200
200	3	3	4	5	6	7	7	8	9	9	10	16
300	4	5	6	7	7	8	9	10	11	11	12	19
400	5	6	6	7	8	9	10	11	12	13	13	20
500	5	6	7	8	9	10	11	12	13	14	15	22
600	6	7	8	9	11	12	13	14	15	16	17	24
700	7	8	9	10	11	13	14	15	16	18	19	26
800	8	9	10	12	13	14	16	17	18	20	21	28
900	8	10	11	12	14	15	17	18	20	21	23	30
1000	9	11	12	14	15	17	18	20	22	23	25	32
1100	10	11	13	15	16	18	20	21	23	25	26	34
1200	11	12	14	16	18	19	21	23	25	27	28	36
1300	11	13	15	17	19	21	22	24	26	28	30	38
1400	12	14	16	18	20	22	24	26	28	30	32	40
1500	13	15	17	19	21	23	25	27	30	32	34	42
1600	14	16	18	20	22	25	27	29	31	34	36	44
1700	14	16	19	21	23	26	28	30	33	35	38	46
1800	15	17	20	22	25	27	30	32	35	37	40	48
1900	16	18	21	23	26	28	31	34	36	39	41	50
2000	16	19	22	25	27	30	33	35	38	41	43	52
2100	17	20	23	25	28	31	34	37,	39	42	45	54
2200	18	21	24	27	30	33	36	38	41	44	47	56
2300	19	22	25	28	31	34	37	40	43	46	49	58
2400	20	23	26	29	32	35	38	42	45	49	51	60

H	W											
	1300	1400	1500	1600	1700	1800	1900	2000	2100	2200	2300	2400
200	17	17	18	21	21	22	23	25	26	27	27	28
300	20	20	21	24	25	26	26	29	30	31	32	32
400	21	22	23	26	27	27	28	31	32	33	34	35
500	23	24	25	28	29	30	31	34	35	36	37	38
600	25	26	27	31	32	33	34	37	38	39	40	41
700	27	28	29	33	34	35	36	40	41	42	43	44
800	29	31	32	35	37	38	39	43	44	45	47	48
900	31	33	34	38	39	40	42	45	47	48	50	51
1000	34	35	37	40	42	43	45	49	50	52	53	55
1100	35	37	39	42	44	46	47	51	53	54	56	58
1200	38	40	41	45	47	49	51	54	56	58	60	62
1300	40	41	43	47	49	51	53	57	59	61	63	65
1400	42	44	46	50	52	54	56	60	62	64	66	68
1500	44	46	48	52	54	56	59	63	65	67	69	71
1600	46	48	51	55	57	59	62	66	68	70	73	75
1700	48	50	53	57	59	62	64	69	71	73	76	78
1800	50	53	55	60	62	65	67	72	74	77	79	82
1900	52	55	57	62	65	67	70	74	77	79	82	85
2000	55	57	60	65	67	70	73	78	80	83	86	88
2100	56	59	62	67	70	72	75	80	83	86	89	91
2200	59	62	65	70	73	76	78	83	86	89	92	95
2300	61	64	67	72	75	78	81	86	89	92	95	98
2400	63	66	69	75	78	81	84	89	92	95	99	102

ØD	UTT/D1	UTT/D2	ØD	UTT/D1	UTT/D2
160	4	4	500	12	15
200	4	5	630	17	21
250	5	6	800	24	30
315	7	9	1000	33	43
400	9	11	1250	52	67

Material

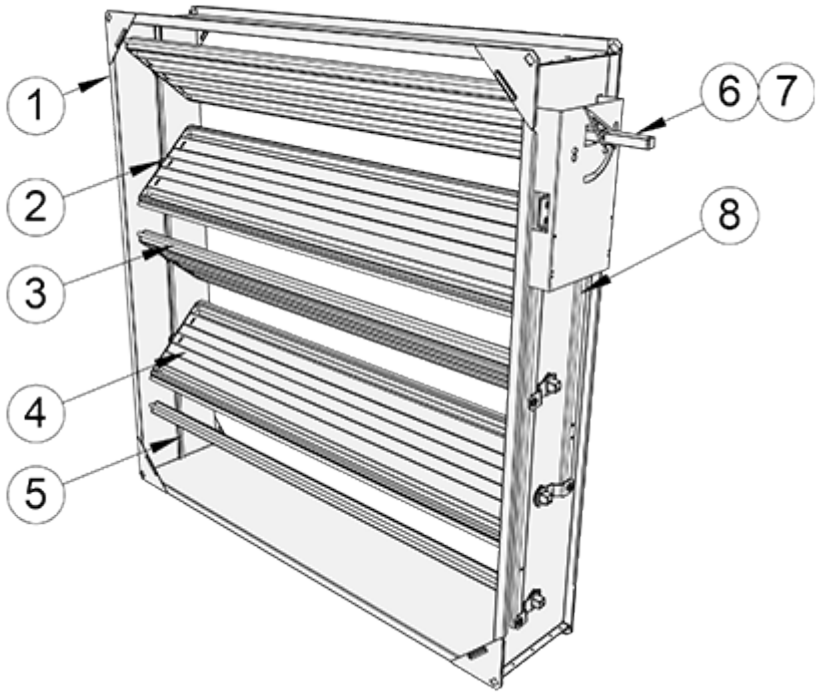

No.	Part	Material	Note
1	Casing	Galvanised steel	Acid proof steel (AISI 316L) also available
2	Blade bearings	Alloy of polyamide and molybdenum suphide (plastic BM=ST).	Also available:
			Stainless steel (AISI 304) (BM=SS)
			Acid proof steel (AISI 316) (BM=AS)
			Bronze JN5 (BM=BR)
3	Blade gaskets	Silicone	Heat-proof model: LTE silicone
4	Blades	Galvanised steel	(sandwich design). Acid proof steel (AISI 316L) also available
5	Gasket inside the casing	Silicone	Only tight UTT and UTX dampers. Gasket fixed in an aluminium profile
6	Rectangular drive shaft (15x15mm)	Galvanised steel	In conjunction with standard plastic bearings (BM=ST)
			Acid proof steel (AISI 316) also available (BM=ST)
7	Round drive shaft (ø15mm)	Acid proof steel	In conjunction with AISI 316 or bronze bearings (BM=AS/SS/BR)
8	Lever mechanism	Galvanised steel	Acid proof steel (AISI 316L) also available

Shaft types and dimensions

Depending on the choice of bearing material, the damper will be equipped with a round or square axle.

On Halton UTT/R dampers with standard bearings (BE=ST) , the damper will be equipped with a square 15×15 mm galvanised steel axle.

On heatproof design Halton UTT/R dampers, and on all dampers with AISI316/304 or bronze JN5 bearings (BM=AS, BM=SS or BM=BR) a round Ø15mm AISI 316 stainless steel axle will be used.

Accessories

The product models MD=I and MD=J have a double sheet casing with mineral wool insulation. The insulation thickness is 20 mm.

The Halton UTT damper is available equipped with either manual adjustment or actuator operation. The adjustment and control arrangement options are:

Adjustment and control options	Code	Note
Manual handle adjustment	MO = MA	
Manual extension bar adjustment	AC = BA	Handle extension arrangement
Actuator operation	MO=	See tables below

The damper actuator is selected from the list below according to the operating voltage, control arrangement and the required torque of the damper.
The torque of the selected actuator can be higher than the required torque of the damper.

Standard actuator options

NM-models

Torque, damper size ... 10 Nm (A<1.2 m^2)
Manual override operation,mechanical position limit

Actuator type	Code MO	Control arrangement	Operating voltage	Power consumption
NM24A	C1	On-off, 3-point	AC/DC 24 V	3,5 VA
NM230A	C2	On-off, 3-point	AC 230 V	5,5 VA
NM24A-SR	C3	Control modulating DC 2...10 V, Position feedback 2...10 V	AC 24 V	4 VA

BFN-models

Torque, damper size ... 9 Nm (A<1.2 m^2)
Spring return, manual operation, position limit

Actuator type	Code MO	Control arrangement	Operating voltage	Power consumption
BFN24-HL	M1	On-off, 2 auxiliary switches	AC/DC 24 V	6 VA
BFN230-HL	M2	On-off, 2 auxiliary switches	AC 230 V	10 VA

BF-models

Torque, damper size ...18 Nm / 12 Nm (A<2.5 m^2)
Spring return, manual operation, position limit

Actuator type	Code MO	Control arrangement	Operating voltage	Power consumption
BF24	E1	On-off, 2 auxiliary switches	AC/DC 24 V	10 VA
BF230	E3	On-off, 2 auxiliary switches	AC 230 V	12,5 VA
BF120	E7	On-off, 2 auxiliary switches	AC 120 V	12,5 VA

SF-models

Torque, damper size ... 20 Nm (A<4 m^2)
Spring return, manual operation, position limit

Actuator type	Code MO	Control arrangement	Operating voltage	Power consumption
SF24A	A6	On-off	AC/DC 24 V	7,5 VA
SF24A-S2	A7	On-off, 2 auxiliary switches	AC/DC 24 V	7,5 VA
SFA	A8	On-off	AC 24...240V / DC 24....125 V	18 VA
SFA-S2	A9	On-off, 2 auxiliary switches	AC 24...240V / DC 24....125 V	18 VA
SF24A-SR	A0	Control modulating DC 2...10 V, Position feedback 2...10 V	AC/DC 24 V	7 VA
SF24A-MP	A11	Control modulating, communicative 2...10 V, Position feedback 2...10 V variable	AC/DC 24 V	11 VA

SM-models

Torque, damper size ... 20 Nm (A<3.3 m^2)
Manual override operation, mechanical position limit

Actuator type	Code MO	Control arrangement	Operating voltage	Power consumption
SM24A	A1	On-off, 3-point	AC/DC 24 V	4 VA
SM24A-S	A2	On-off, 3-point, 1 auxiliary switch	AC/DC 24 V	4 VA
SM230A	A3	On-off, 3-point	AC 230 V	6 VA
SM230A-S	A4	On-off, 3-point, 1 auxiliary switch	AC 230 V	6 VA
SM24A-SR	A5	Control signal DC 0...10 V, Position feedback 2...10V	AC/DC 24 V	4 VA
SM24A-MA	M3	Control modulating 4...20 mA, Position feedback 2...10 V	AC/DC 24 V	6 VA

GM-models Torque, damper size ...40 Nm (A<6 m^2)
Manual override operation

Actuator type	Code MO	Control arrangement	Operating voltage	Power consumption
GM24A	G1	On-off, 3-point	AC/DC 24 V	6 VA
GM230A	G2	On-off, 3-point	AC 230 V	9 VA

Special actuators

Actuator type	Code MO	Control arrangement	Operating voltage	Power consumption
InMax-15-SF	M4	On-off, Spring return, 2 auxiliary switches	VAC/DC 24...240 V	–
NFA-S2 (10Nm) Halogen free cable	M5	On-off, Spring return, 2 auxiliary switches	AC 24...240 V/DC 24...125 V	9,5 VA

Required torque for Halton UTT-damper actuator

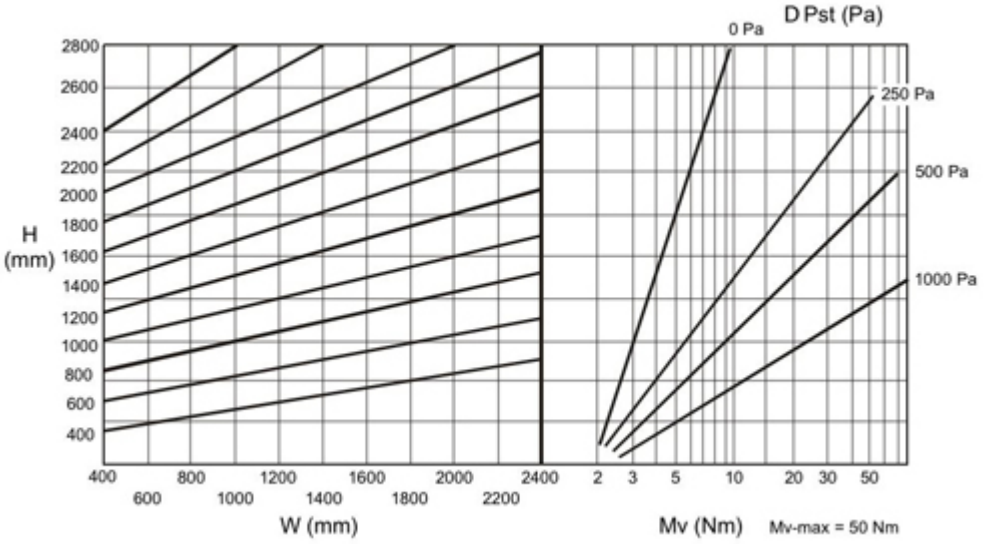

Function

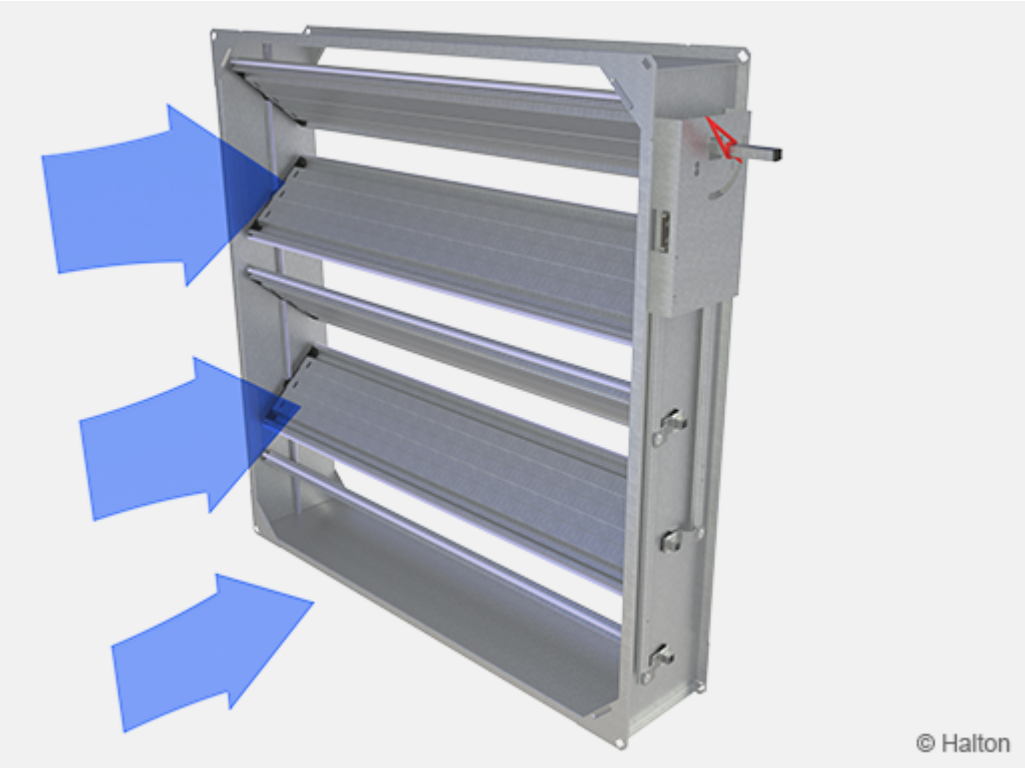

The Halton UTT dampers are used to shut off or control airflow in ductwork where tightness, thermal insulation and reliability are important.
In the closed position the Halton UTT damper leakage class is 3 in accordance with the EN1751 standard.

In the open position the blades are turned in the direction of flow and do not cause significant

pressure losses.

Damper sizes conform with the international standards EN 1505, EN1506 and ISO 1707 for rectangular and circular ducts.

The maximum operation temperature of a standard damper is +100°C (for optional models +200°C).

Heat transmission of the damper is 6 W/(m 2 K).

Installation

Install the damper in the ductwork with the blades in horisontal or vertical position.
Fasten the damper in the ductwork using slip joints (SF=NA).

Optional models enable fastening the damper to duct flange by using bolts (SF=R2).
Drill holes in the damper flange if necessary (options SF=L1 / SF=L2).
Use a seal between the flanges in order to tighten the seam.

Fasten the models with circular connections by riveting or screwing.

Wiring:

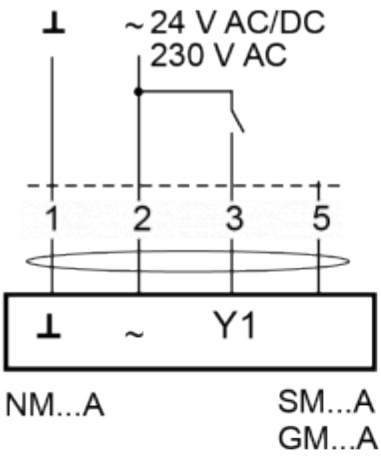

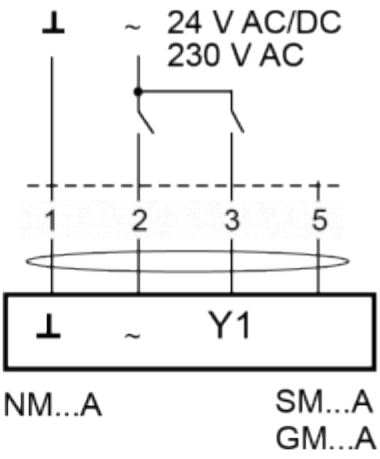

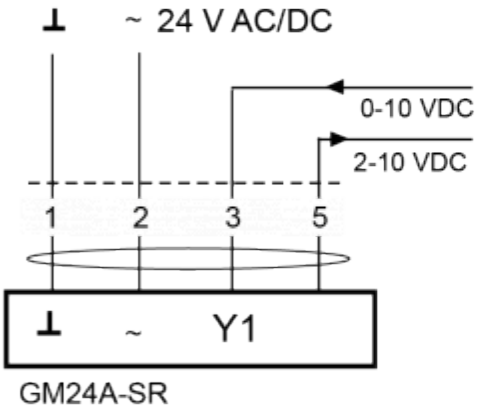

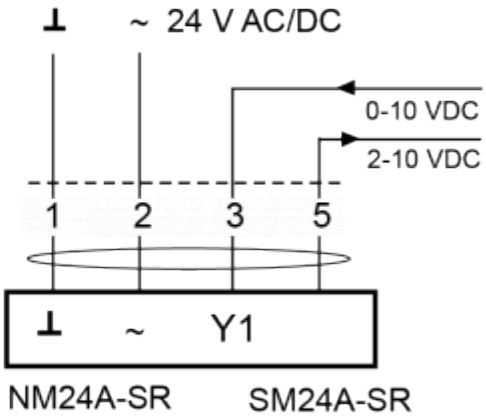

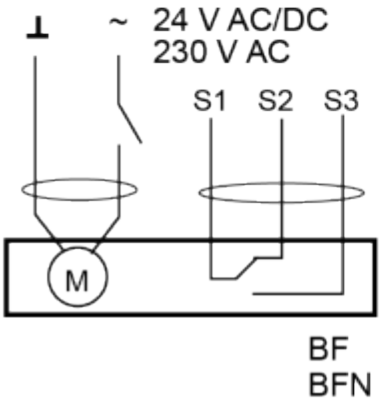

Specification

The casing and blades are made from galvanised steel or stainless steel (EN 1.4404/AISI 316L).

The blade gaskets are made of silicon (or EPDM- rubber).
The drive shaft socket is made of galvanised steel with self-lubricating slide bearings.
The bearing is made from an alloy of polyamide and molybdenum sulphide (or stainless steel AISI 316 or stainless steel AISI 304 or bronze).

The damper is installed into rectangular ducts in compliance with EN 1751, or in circular ducts D=100 ...1250mm in accordance with EN 1751.
The damper meets the tightness requirements of EN 1751 class 3.
The casing of the damper meets the tightness requirements of EN 1751 class B.

Heat transmission of the damper does not exceed 6 W/(m2K).
The damper is suitable for either manual adjustment or actuator operation.

Order code

UTT/S-W-H-D, CT-SF-MA-MD-BM-MO-AC-ZT

S = Type of duct connections
R Rectangular connections
C Circular connections

W = Width (mm)
100,+1,..,2400

H = Height (mm)
100,+1,..,2400

D = Connection size for circular model (mm)
100, 125, 160, 200, 250, 315, 400, 500, 630, 710, 800, 1000, 1250

Other options and accessories

CT = Type of circular connection
D2 2 circular connections
D1 1 circular connection

SF = Flange option
NA Slip joints
L1 Slip joints + flange connection
L2 Flange connection, both sides
R2 Flange connection, both sides with holes
P1 Flange P30
P2 Flange P30 with FDL drilling
P3 Flange connection with FDL drilling (Marine)

MA = Material
CS Steel

AS Stainless steel (EN 1.4404/AISI 316L)

MD = Model
N Standard
H Heat-proof
I Insulated
J Heat-proof and insulated

BM = Bearing material
ST Plastic
AS Stainless steel (AISI 316)
SS Stainless steel (AISI 304)
BR Bronze (JN5)

MO = Actuator
NA Not assigned
MA Manual handle
E1 BF24 (no fuse), 24V, 18 Nm
E3 BF230 (no fuse), 230V, 18 Nm
E7 BF120 (no fuse), 120V, 18 Nm
M1 BFN24-HL (no fuse), 24V, 9 Nm / 7 Nm
M2 BFN230-HL (no fuse), 230V, 9 Nm / 7 Nm
P0 Pneumatic, Rot.AT101
A1 SM24A (on-off), 24V, 20 Nm
A2 SM24A-S (on-off), 24V, 20 Nm
A3 SM230A (on-off), 230V, 20 Nm
A4 SM230A-S (on-off), 230V, 20 Nm
A5 SM24A-SR (modulating), 24V, 20 Nm
A6 SF24A (on-off), 24V, 20 Nm
A7 SF24A-S2 (on-off), 24V, 20 Nm
A8 SFA (on-off), AC 24-240V/DC 24-125V, 20 Nm
A9 SFA-S2 (on-off), AC 24-240V/DC 24-125V, 20 Nm
A0 SF24A-SR (modulating), 24V, 20 Nm
A11 SF24A-MP (modulating), 24V, 20 Nm
C1 NM24A (on-off), 24V, 10 Nm
C2 NM230A (on-off), 230V, 10 Nm
C3 NM24A-SR (modulating), 24V, 10 Nm
M3 SM24A-MA (modulating), 24V, 20 Nm
G1 GM24A (on-off), 24V, 40 Nm
G2 GM230A (on-off), 230V, 40 Nm
M4 InMax-15-SF, VAC/DC 24...240 V, 15 Nm
M5 NFA-S2, AC 24-240V/DC 24-125V, 10 Nm
K1 FIC actuator

AC = Accessories
BA Bar adjustment
S4 S2A Auxiliary switch
L1 Limit switch, 1 pc (IP65)
L2 Limit switch, 2 pcs (IP65)
AR Position indication arrow
WH Connector (Marine/Wieland)

WB Connector (Marine/Wieland Blue1, MAC)
TG Tag

ZT = Tailored product
N No
Y Yes (ETO)

Code example

UTT/R-100-100, SF=NA, MA=CS, MD=N, BM=ST, MO=MA, AC=BA, ZT=N